2010 Sundance Spas 780 Camden

Specifications

Dimensions: ..... 76" x 83" x 34" (193 cm x 211 cm x 86.5 cm)
Seating Capacity: ..... 4 Adults
Dry Weight: ..... 622 lbs (282 kg)
Filled Weight: ..... 3,476 lbs (1,577 kg)
Water Capacity (Spa Volume): ..... 342 US Gal (1,295 Liters)
Water Capacity (Average Fill): ..... 290 US Gal (1,098 Liters)
Controls: ..... 780 Series Solid-State Electronic Controls with LED Readout, Programmable Temperature, Filtration, and Heat Cycles
Water Delivery: ..... 1 High Flow Pump
Pump 1: ..... North America (60 Hz): 2-Speed/2.5 HP Continuous, 11A Max;
Export (50 Hz): 2-Speed/2.0 HP Continuous, 8.0A Max
Pump 2: ..... 24-Hour Filter/Circulation Pump
Total Hydrojets: **24**
Therapy Seat 1 Jets (A): ..... 2 SMT Mini
Accu-Ssage Therapy Seat Jets (B): ..... 9 Accu-Pressure, 2 SMT Micro
Pivot Seat Jets (C): ..... 2 SMT Mini, 2 SMT Fluidix
Therapy Seat 2 Jets (D): ..... 2 SMT Micro, 2 SMT Mini, 1 SMT
Footwell Jets: ..... 2 SMT
Air Controls/Massage Selectors: ..... 4/1; Standard air controls with LED light rings
Filter: ..... MicroClean I Filtration System with Floating Weir, 125 ft² combined filtration, (1 pleated and 1 spun-bound cartridge)
Water Treatment: ..... Automatic Brominator and 24-Hour Circulation Pump; Ozone Adaptable
Lighting: ..... Standard Multi-Colored SunRay LED Light
Synthetic Cabinet: ..... Available in Sierra, Coastal, and Mahogany
Shell Colors: ..... North America: Platinum, Sand, Sahara, Celestite, Oyster, Copper Sand, Twilight, Graphite
Export (50 Hz): All North America Colors
Handrails: ..... N/A
Headrests: ..... Three, 1-Piece Gray
Heater: ..... North America Model (60 Hz): Low Flow 5 kW@240 VAC;
Export (50 Hz): Low Flow, 2.7 kW
Electrical Requirements: ..... North America Model (60 Hz): 240 VAC@40A or 50A
Export (50 Hz): 230-240 VAC@20A or 30A; or Suitably Rated Circuit Breaker to Comply with Local Electrical Regulations. Certain Countries May Require Dual Power Inputs; Two GFCI/RCD Breakers are Required for This Configuration.
Limited Warranty*: ..... North America (60 Hz): 10 Years Shell, 7 Years Shell Surface, 5 Years Plumbing Component Leaks, 5 Years Equipment and Controls, 5 Years Cabinet, 2 Years Jets
Export (50 Hz): 10 Years Shell, 7 Years Shell Surface, 2 Years Plumbing Component Leaks, 2 Years Equipment and Controls, 2 Years Cabinet, 2 Years Jets
Waterfall Feature: ..... On/Off Flow Rate; Colored Lighting
Special Features: ..... The Optional SunSurround Audio System Not Offered on This Model
Inground Model ..... Not Available

Optional Factory Only Installed Stainless Steel Jet Escutcheons

*(See Warranty Document for Specific Details)

Dimensions/Specifications Subject To Change Without Notice

2010 Sundance Spas 780 Camden

Operation/New Features

24 Total Jets

Spa Operation Subject To Change Without Notice

(A) Air Control - Adjusts All Therapy Seat 1 Jets (2 SMT Mini) + Footwell Jets (2 SMT)

(B) Air Control - Adjusts All Accu-Ssage Therapy Seat Jets (2 SMT Micro, 9 Accu-Pressure)

(C) Waterfall Selector [24-Hour Circ. Pump] - Controls Waterfall Output

(D) Massage Selector [Pump 1]- Adjusts Massage Level Between Accu-Ssage Therapy Seat Jets and All Contour Seat Jets + Therapy Seat 2 Jets

(E) Air Control - Adjusts All Contour Seat Jets (2 SMT Fluidix, 2 SMT Mini)

(F) Air Control - Adjusts Therapy Seat 2 Jets (2 SMT Micro, 2 SMT Mini, 1 SMT)

- Footwell Jets + Therapy Seat 1 Jets are always on when the pump is running

NEW FOR 2010!

Dimensions/Specifications Subject To Change Without Notice

2010 Sundance Spas 780 Camden

Portable Dimensions

TOP VIEW

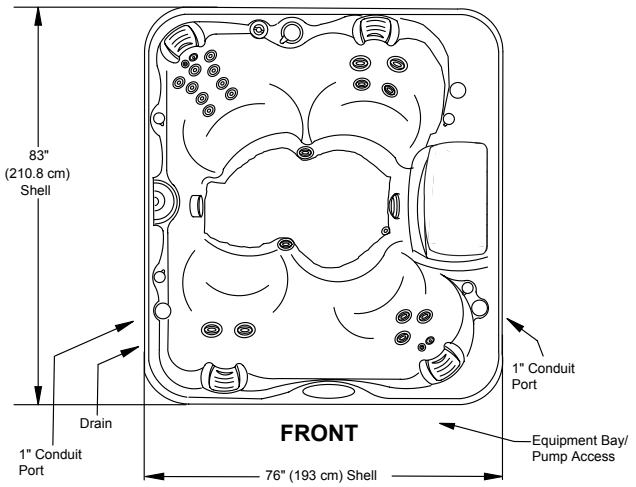

FRONT/BACK VIEW

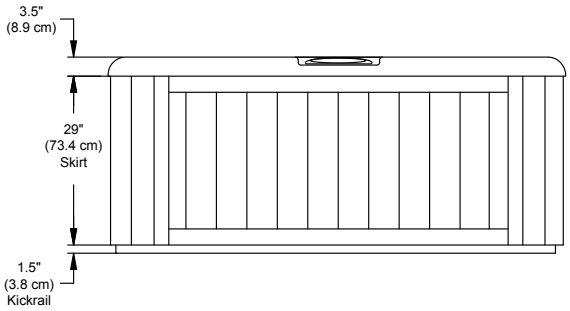

LEFT/RIGHT SIDE VIEW

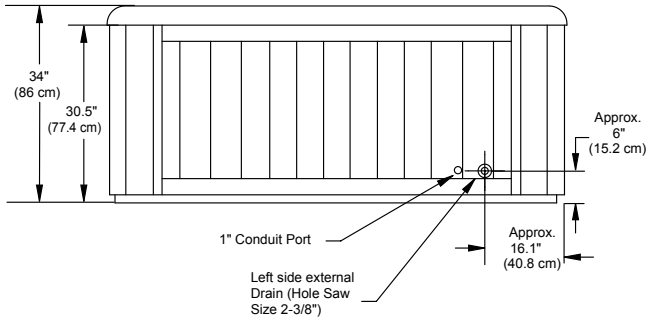

STOP **IMPORTANT! Always measure each hot tub for exact dimensions BEFORE designing its foundational support and/or decking.** **STOP**

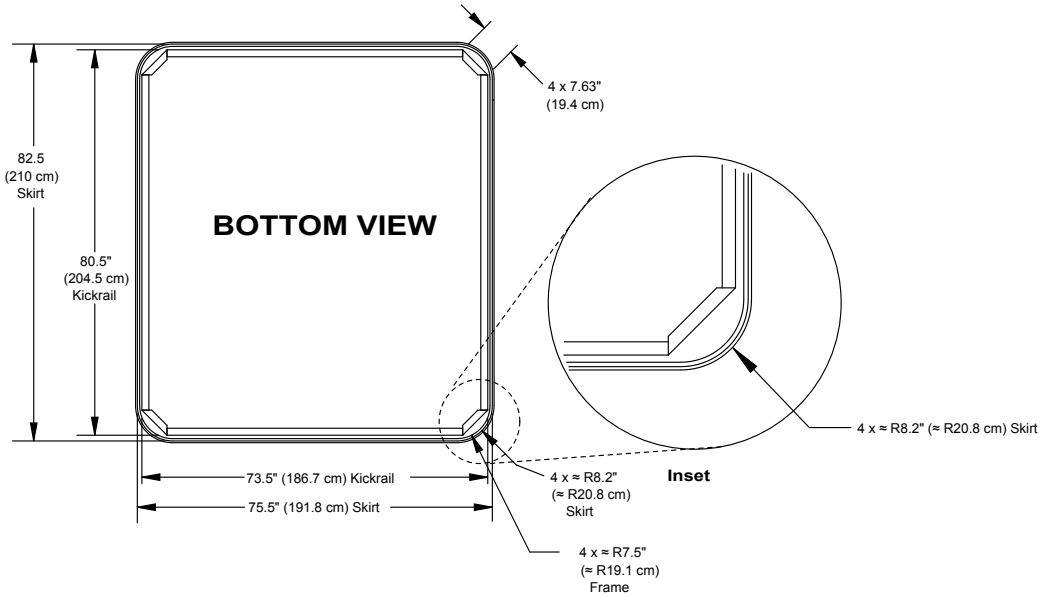

Dimensions/Specifications Subject To Change Without Notice